TRIUMPH®

Olmedo Badía S.A. de C.V.
www.olmedobadia.com
info@olmedobadia.com
Tel. (55)5557-0397

1110

The 1110 Professional Tabletop Trimmer, with a 43.3" cutting length, features a resharpenable Solingen steel blade, stationary safety guard, and solid manual clamp. Its precision side lay, adjustable back gauge, and all-metal construction ensure accurate, safe operation. Made in Germany for superior quality.

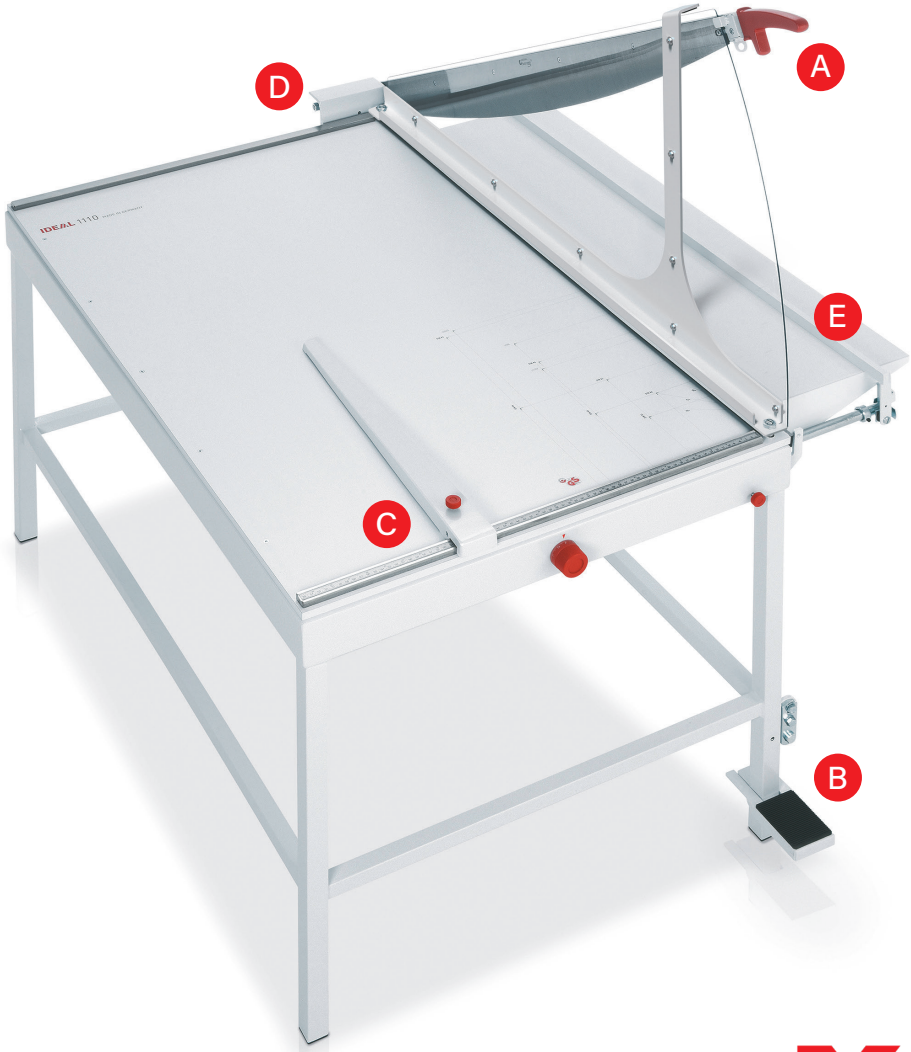

A ERGONOMIC HANDLE
The specially designed handle offers enhanced comfort and safety during operation.

B FOOT PEDAL CLAMP
An integrated foot pedal ensures positive clamping.

C PRECISE LOCKABLE BACK GAUGE
For Accuracy Lockable back gauge provides precise and consistent paper alignment for accurate and reliable cutting results.

D BLADE MOUNT
The solid cast aluminum blade mount features double pivot bearings for smooth and stable blade operation.

E EXTENSION TABLE
A fold-down table extension supports large format materials.

www.mbmcorp.com
843-552-2700
MBM

TRIUMPH®

1110

Olmedo Badía S.A. de C.V.
www.olmedobadia.com
info@olmedobadia.com
Tel. (55)5557-0397

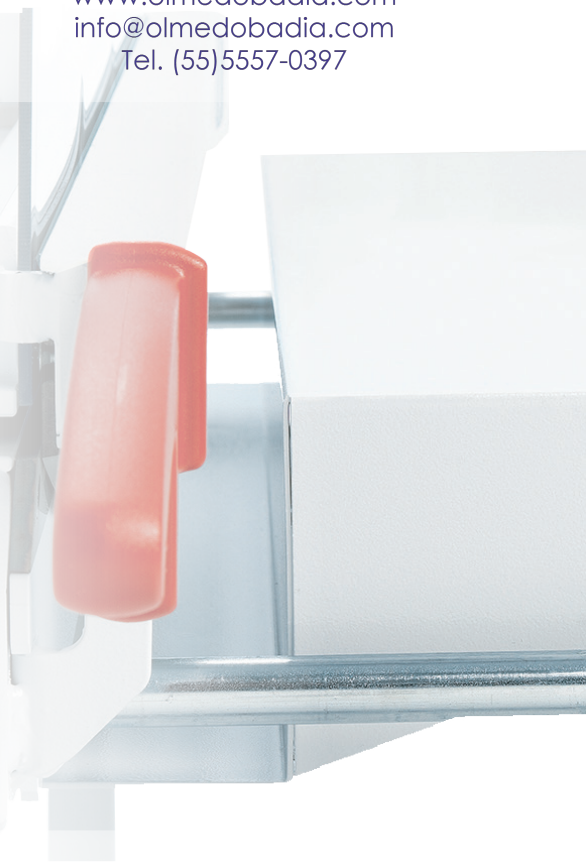

- Fold-down extension table supports large cutting projects
- Foot pedal-operated clamping system ensures secure and accurate cuts
- Large-format floor model trimmer for handling large cutting tasks
- Resharpenable Solingen steel blade for long-lasting sharpness and durability
- Wide-angle blade cuts heavy materials like mat board, plastic, and metal foil
- Precision side guides with inch and metric scales for alignment
- Adjustable back gauge for flexible paper positioning
- Front gauge with fine adjustment and lockable rotary knob for accuracy
- Narrow-strip cutting device for precise small cuts

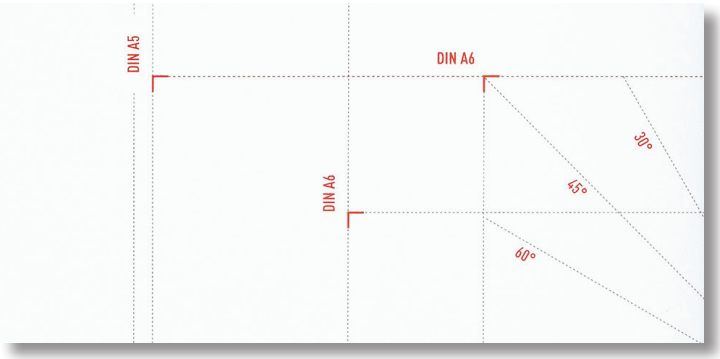

Format Indications
For efficient and easy cutting. Standard paper sizes and various angle indications printed on the tableturdy.

Steel Blade
German Solingen steel blades are self-sharpening and can be re-sharpend for continued accuracy.

Specifications:

Cutting length	43.3″	Dimensions (D x W X H)	54.75″ x 32.5″ x 53.5″
Sheet capacity	20*	Shipping weight	182 lbs
Table size (D x W)	43.3″ x 30″		

* May vary due to variations in paper

www.mbmcorp.com
843-552-2700
MBM

© 2024 MBM Corporation. All rights reserved. This information is subject to change without notice and products may be shown with optional features. 10/2024